3712926(897-911)COM - WRAP AROUND TABLES

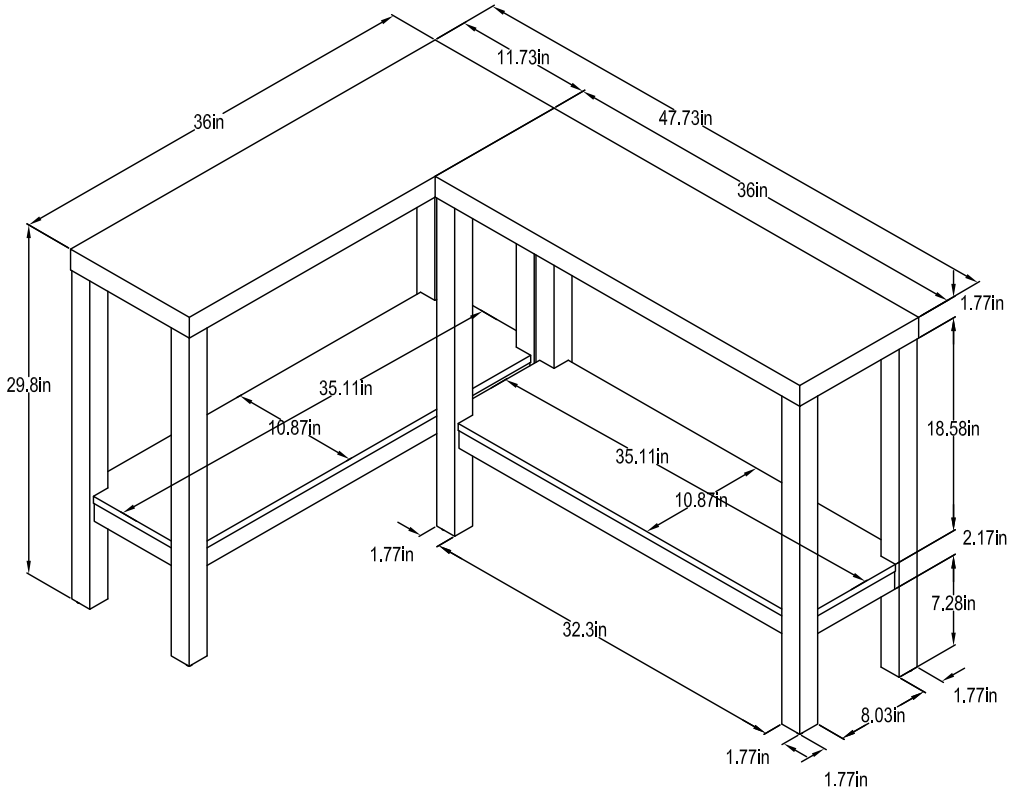

Wood Breakdown:
MDF 10%, PB 90%.
Total storage: 8.2 cubic feet

Overall Product Size:
47.73" W × 36" D × 29.8" H
121.2cm W ×91.4cm D × 75.7cm H

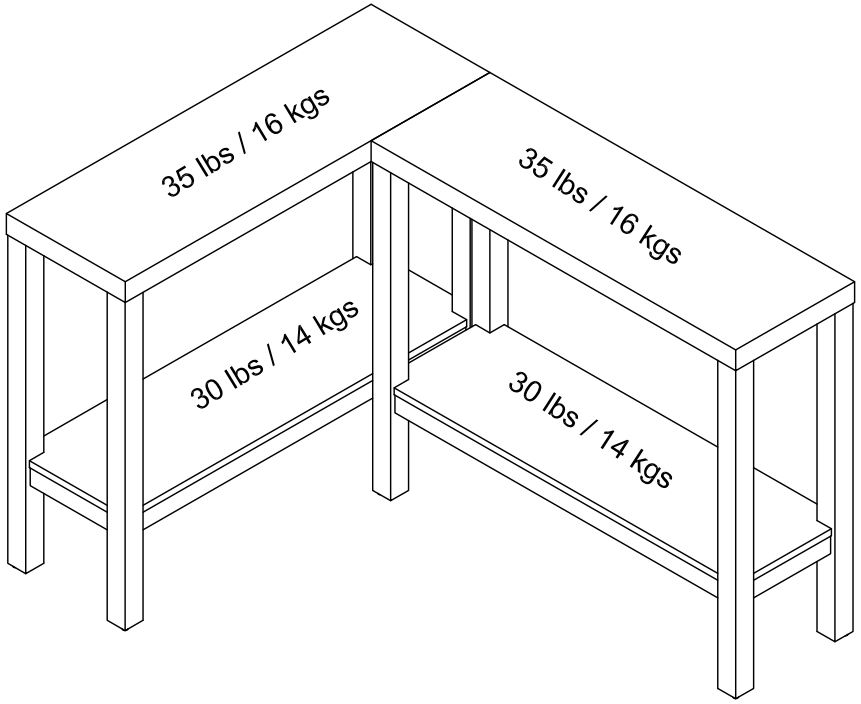

Maximum Weight Capacities
Unit Weight: 44.396lbs. (20.18kg)